optris CTi 3M
TECHNICAL DATA

optris infrared measurements

Precise non-contact temperature measurement of metal from 30 °C to 1850 °C



Features:

- Miniaturized Infrared Thermometer with 2.3 µm spectral range for measurements of metals, of secondary metal processing, metal oxides and ceramic materials
- Very small sensing head of 14 mm diameter and 28 mm length fits everywhere and is usable up to 85 °C ambient temperature without cooling
- Temperature measuring ranges from 30 °C to 1850 °C and very fast exposure time of 110 µs
- Short wave length range of 2.3 µm to reduce error of reasding with measurements on materials with unknown emissivity

General Specifications	
Environmental rating	IP 65 (NEMA-4)
Operating temperature range	–20 °C ... 85 °C (sensing head) –20 °C ... 85 °C (electronics)
Storage temperature	–40 °C ... 125 °C (sensing head) –40 °C ... 85 °C (electronics)
Operating air humidity range	10 ... 95 %, non-condensing
Vibration (sensor)	IEC 60068-2-6 (sinus shaped) IEC 60068-2-64 (broadband noise)
Shock (sensor)	IEC 60068-2-27 (25G and 50G)
Weight	40 g (sensing head) 420 g (electronics)

Electrical Specifications	
Outputs / analog	0/4 – 20 mA, 0 – 5/10 V, thermocouple K, alarm
Outputs / alarm	24 V/ 50 mA (open collector)
Relay outputs (optional)	Relay: 2 x 60 V DC/ 42 V AC_{RMS}; 0.4 A; optically isolated
Digital interfaces	built-in USB-interface, Optional: EtherNet/IP, Profinet, EtherCAT, Ethernet TCP/IP / Modbus TCP, Modbus RTU, RS485, RS232 or relay outputs (2 x optically isolated)
Output impedances	mA max. 500 Ω (with 8 – 36 V DC) mV min. 100 kΩ load impedance thermocouple 20 Ω
I/O Pins (3x)	flexible programming as in- or output: external emissivity adjustment, ambient temperature compensation, uncommitted value, trigger (reset of hold functions), alarm output (open collector 24 V/ 50 mA)
Cable length	3 m (standard), 8 m, 15 m
Power supply	8 – 36 V DC / 1.2 W

Measurement Specifications	
Temperature ranges (scalable via programming keys or software / App)	30 °C ... 350 °C (3MXL) 50 °C ... 475 °C (3ML) 100 °C ... 600 °C (3MH) 150 °C ... 1000°C (3MH1) 200 °C ... 1500 °C (3MH2) 250 °C ... 1850 °C (3MH3)
Spectral range	2.3 µm
Optical resolution (90 % energy)	12:1 (3MXL) 22:1 (3ML) 33:1 (3MH) 75:1 (3MH1 / 3MH2 / 3MH3)
Measurement uncertainty [2),3), 4), 7)]	± 1,5 °C (3MXL / 3ML / 3MH) ± (0.3% of reading + 1,5 °C) (3MH1 / 3MH2 / 3MH3)
Repeatability [4), 5), 6), 7)]	± 0.25 K (3MXL / 3ML /3MH / 3MH2 / 3MH3) ± 0.6 K (3MH1)
Temperature coefficient [2), 3), 4)]	± 0,01 K/K (3MH2 / 3MH3) ± 0,05 K/K (3MH) ± 0,08 K/K (3MXL / 3ML / 3MH1)
NETD (typically) [4), 5), 6), 7)]	70 mK (3MH3) 85 mK (3MXL) 95 mK (3MH/ 3MH2) 105 mK (3ML) 200 mK (3MH1)
Temperature resolution (display)	0.1 K
Exposure time (90%)	110 µs
Response time (90%)	320 µs
Emissivity / Gain (adjustable via programming keys or software / App)	0.05...1.100
Transmissivity / Gain (adjustable via programming keys or software / App)	0.05...1.100
Signal processing (parameter adjustable via programming keys or software / App)	Peak hold, valley hold, average; extended hold functions with threshold and hysteresis
Software / App	optris CompactPlus Connect / IRmobile App

[1)] The LCD display capacity may be limited at ambient temperatures below 0 °C
[2)] Whichever is greater
[3)] Response time = 200 ms (90%)
[4)] ε = 1.000
[5)] Tobj = Tmin + 50 °C
[6)] Response time = 1 ms (90%)
[7)] at ambient temperature (23 ± 5) °C

Optris GmbH & Co. KG · Ferdinand-Buisson-Str. 14 · 13127 Berlin · Germany
Phone: +49 30 500 197-0 · E-mail: info@optris.de · https://optris.com

萬和儀器有限公司
ONEHO INSTRUMENT LTD.
台北市內湖區瑞光路618號8樓 TEL: 02-26271088
台中市西屯區朝富路213號23樓-2(A5) TEL: 04-22525037
高雄市楠梓區德民路220號 TEL: 07-3651388
WEB

optris CTi 3M

Optical specifications - Standard Focus (SF)

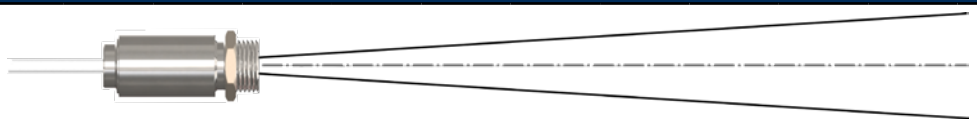

Device	D:S	Optical values											
		0	100	200	300	400	500	600	700	800	900	1000	Distance (mm)
3MXL	12:1	6.5	13.2	19.9	26.6	33.3	43.3	53.3	63.2	73.2	83.1	93.1	Spotsize (mm)
		0	100	200	300	400	500	600	700	800	900	1000	1100 Distance (mm)
3ML	22:1	6.5	10.5	14.4	18.4	22.3	26.3	30.2	34.2	38.1	42.1	46.0	50.0 Spotsize (mm)
		0	200	400	600	800	1000	1200	1400	1600	1800	2000	Distance (mm)
3MH	33:1	6.5	11.8	17	22.3	27.5	32.8	38.1	43.3	48.5	53.8	60.3	Spotsize (mm)
3MH1/ 3MH2	75:1	6.5	8.4	10.3	12.5	13.9	15.8	17.6	19.5	21.3	24.8	28.3	Spotsize (mm)

Optical specifications - Close Focus (CF)

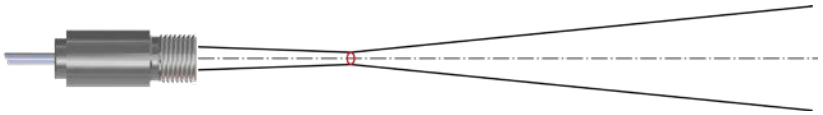

Device	D:S	Optical values										
		0	15	30	50	75	100	125	150	175	200	Distance (mm)
3MXL CF1	12:1	6.5	4.5	2.5	8.5	16	23.5	31	38.5	46	53.5	Spotsize (mm)
3ML CF 1	22:1	6.5	3.9	1.4	6.6	13.2	19.7	26.3	32.8	39.4	45.9	Spotsize (mm)
3MH CF 1	33:1	6.5	3.8	1	6	23.3	18.5	24.8	31	37.3	43.5	Spotsize (mm)
		0	40	80	110	150	200	250	300	350	400	Distance (mm)
3MXL CF	12:1	6.5	7.5	8.4	9.2	14.9	22.0	29.1	36.2	43.3	50.5	Spotsize (mm)
3ML CF	22:1	6.5	6.0	5.4	5	9.2	14.4	19.6	24.9	30.1	35.3	Spotsize (mm)
3MH CF	33:1	6.5	5.3	4.2	3.3	6.9	11.4	15.8	20.3	24.8	29.3	Spotsize (mm)
3MH1 CF/ 3MH2 CF/ 3MH3 CF	75:1	6.5	4.7	2.8	1.5	4.4	8	11.6	15.2	18.8	22.5	Spotsize (mm)

Dimensions

Sensing head (standard)

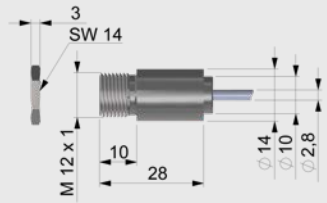

Sensing head (CF optics)

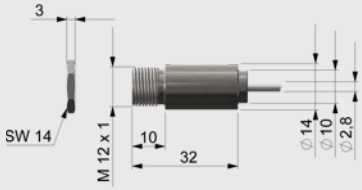

Electronics

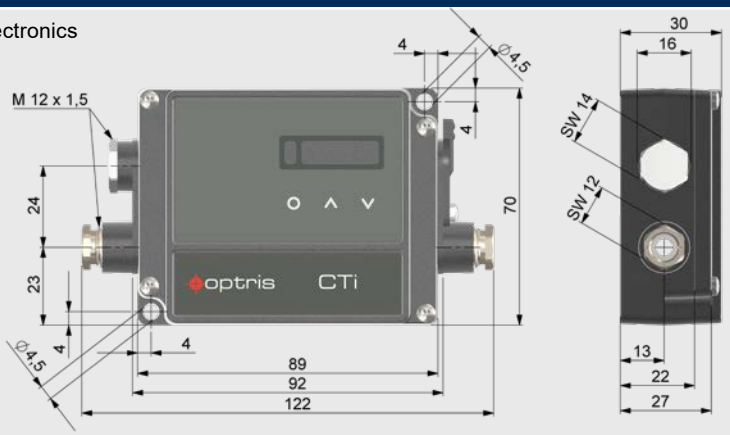

Accessories (examples)

CF-lens (ACCTCFHT)

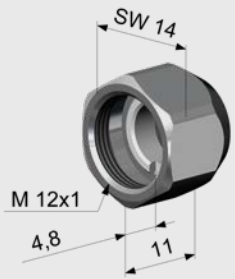

Mounting bracket, fixed (ACCTFB)

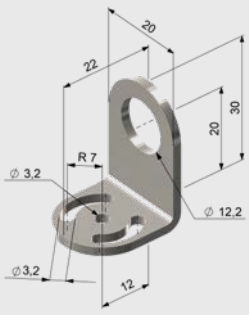

Air purge collar with integrated CF-lens (ACCTAPLCFHT)

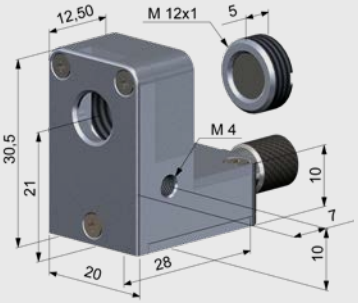

Specifications are subject to change without notice · CTi 3M-DS-EN2026-03_B